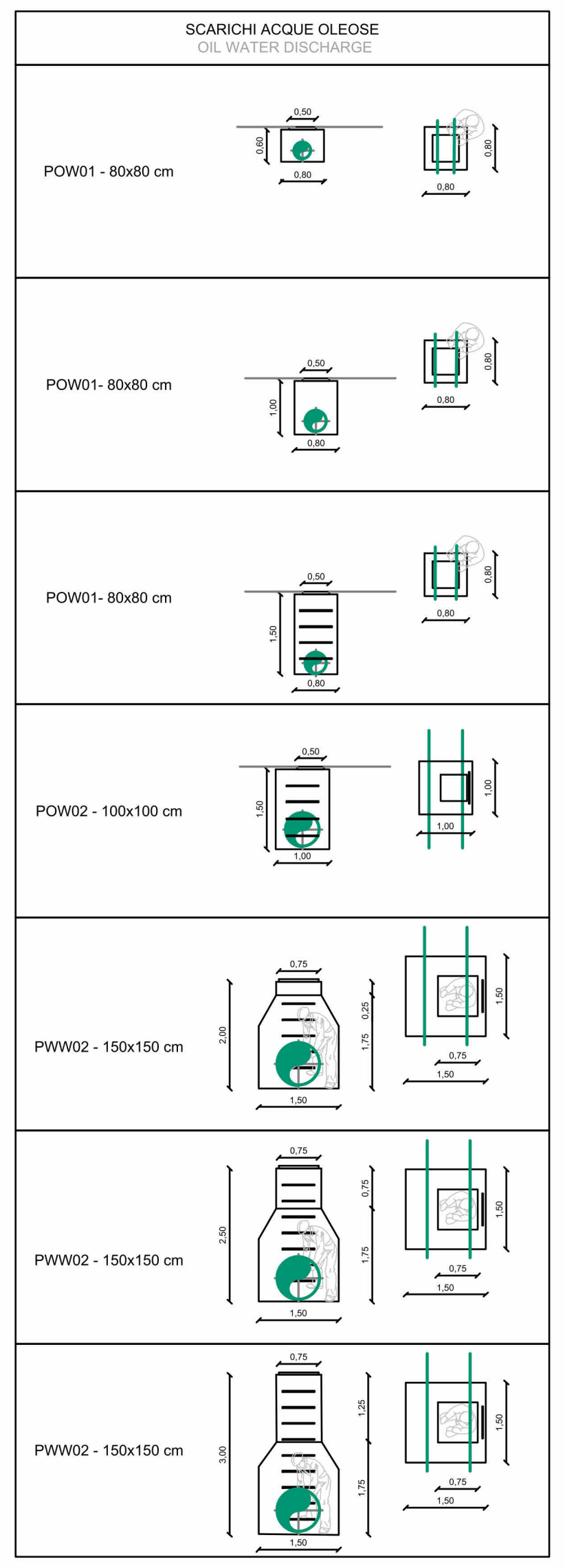
SCARICHI ACQUE OLEOSE
OIL WATER DISCHARGE
POW01 - 80x80 cm
POW01 - 80x80 cm
POW01 - 80x80 cm
POW02 - 100x100 cm
PWW02 - 150x150 cm
PWW02 - 150x150 cm
PWW02 - 150x150 cm

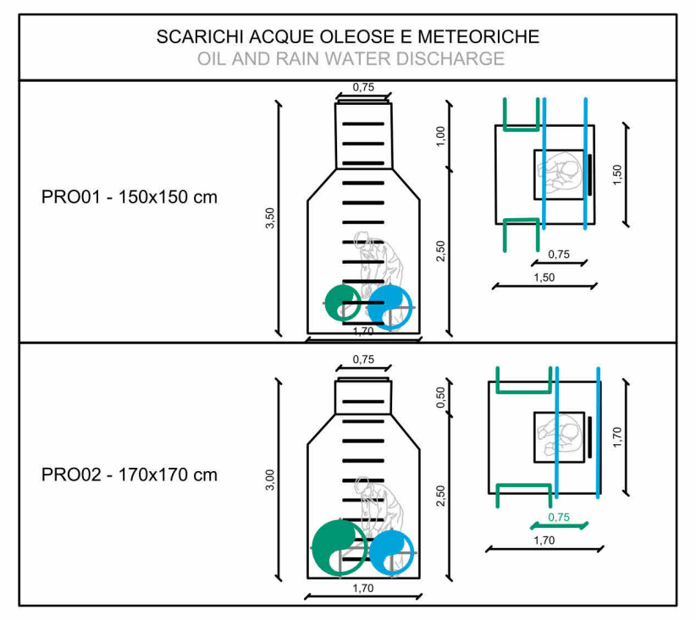
SCARICHI ACQUE OLEOSE E METEORICHE
OIL AND RAIN WATER DISCHARGE
PRO01 - 150x150 cm
PRO02 - 170x170 cm

STORM DRAIN TYPICAL DETAIL

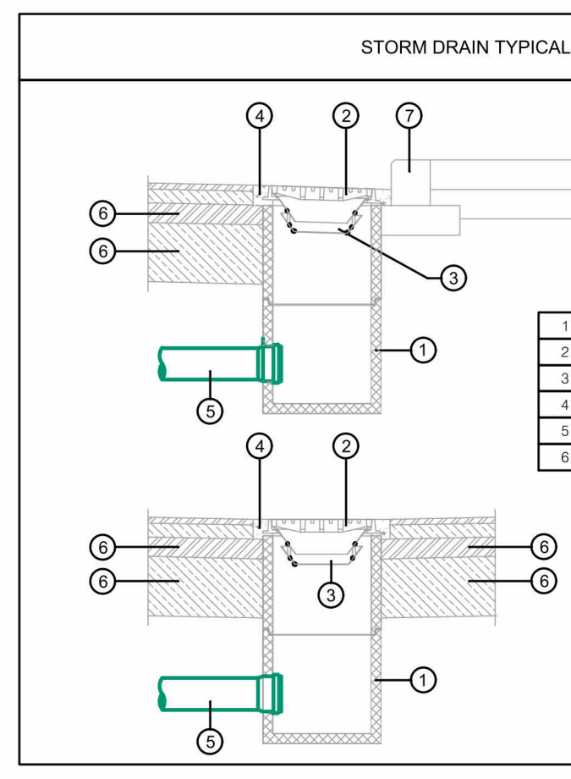
4
2
7
6
6
3
1
5
4
2
6
6
6
6
3
1
5

	DESCRIPTION
1	PRECAST MANHOLE IN CONCRETE
2	IRON CLASS D400 FLAT LAMELLAR GRID
3	TANK OF THE SIPHON OF SEWER
4	CURBS IN CONCRETE
5	PEAD PIPE TYPE
6	PRECAST CONCRETE OF THE CURBS ROAD

CONCRETE WALL WATER TIGHT PENETRATION

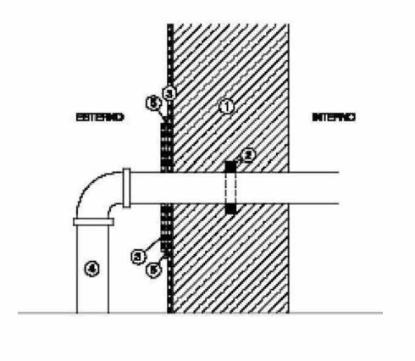
ESTERNO
INTERNO
1
2
3
4
5

	DESCRIPTION
1	REINFORCED CONCRETE WALL CONTAINMENT FOR TANK SYSTEM
2	WATER EXPAND JOINT
3	WATERPROOFING BARRIER
4	PEAD PIPE
5	ADDITIONAL WATERPROOFING BARRIER

TRENCH DRAIN TYPICAL DETAIL

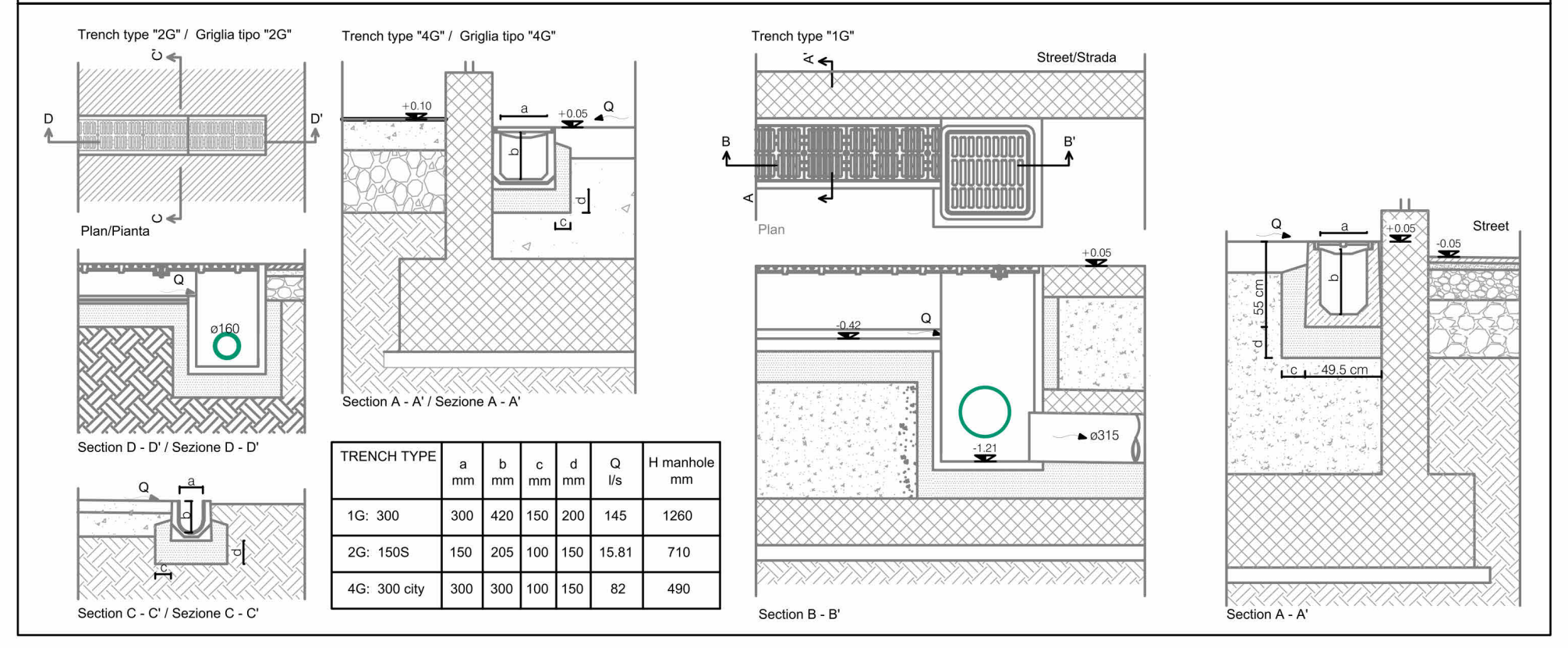
Trench type "2G" / Griglia tipo "2G"
Plan/Pianta
Section D - D' / Sezione D - D'
Section C - C' / Sezione C - C'
Trench type "4G" / Griglia tipo "4G"
Section A - A' / Sezione A - A'
Trench type "1G"
Street/Strada
Plan
Section B - B'
Street
Section A - A'
ø160
ø315
49.5 cm
55 cm
+0.10
+0.05
-0.42
-1.21
-0.05

TRENCH TYPE	a mm	b mm	c mm	d mm	Q l/s	H manhole mm
1G: 300	300	420	150	200	145	1260
2G: 150S	150	205	100	150	15.81	710
4G: 300 city	300	300	100	150	82	490

EXCAVATION TYPICAL CROSS SECTION

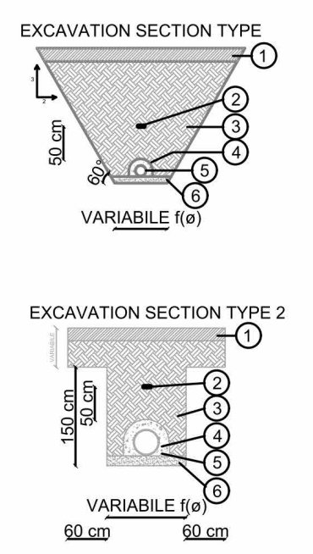
EXCAVATION SECTION TYPE
50 cm
60°
VARIABILE f(ø)
EXCAVATION SECTION TYPE 2
150 cm
50 cm
VARIABILE f(ø)
60 cm
60 cm
1
2
3
4
5
6

PIPE DIAMETER	THICKNESS OF THE CONCRETE OF COVER	THICKNESS OF BACKGROUND SAND	WIDTH DIGGING
PVC ø160	≥ 100 mm	100 mm	800 mm
PVC ø200	≥ 100 mm	100 mm	800 mm
PEAD ø250	≥ 100 mm	100 mm	800 mm
PEAD ø315	≥ 100 mm	100 mm	800 mm
PEAD ø400	≥ 150 mm	150 mm	1200 mm
PEAD ø500	≥ 150 mm	150 mm	1300 mm
PEAD ø630	≥ 200 mm	150 mm	1600 mm
PEAD ø800	≥ 250 mm	150 mm	1800 mm
PEAD ø1000	≥ 300 mm	150 mm	2000 mm

	DESCRIPTION
1	STREET PACKAGE
2	WARNING TAPE-SEWER
3	FILL IN DRY MATERIAL
4	SUPPORT IN CONCRETE (THICKNESS AS A FUNCTION OF ø PIPE)
5	SUPPORT IN CONCRETE (THICKNESS AS A FUNCTION OF ø PIPE)
5	SIFTED SAND IN BACKGROUND

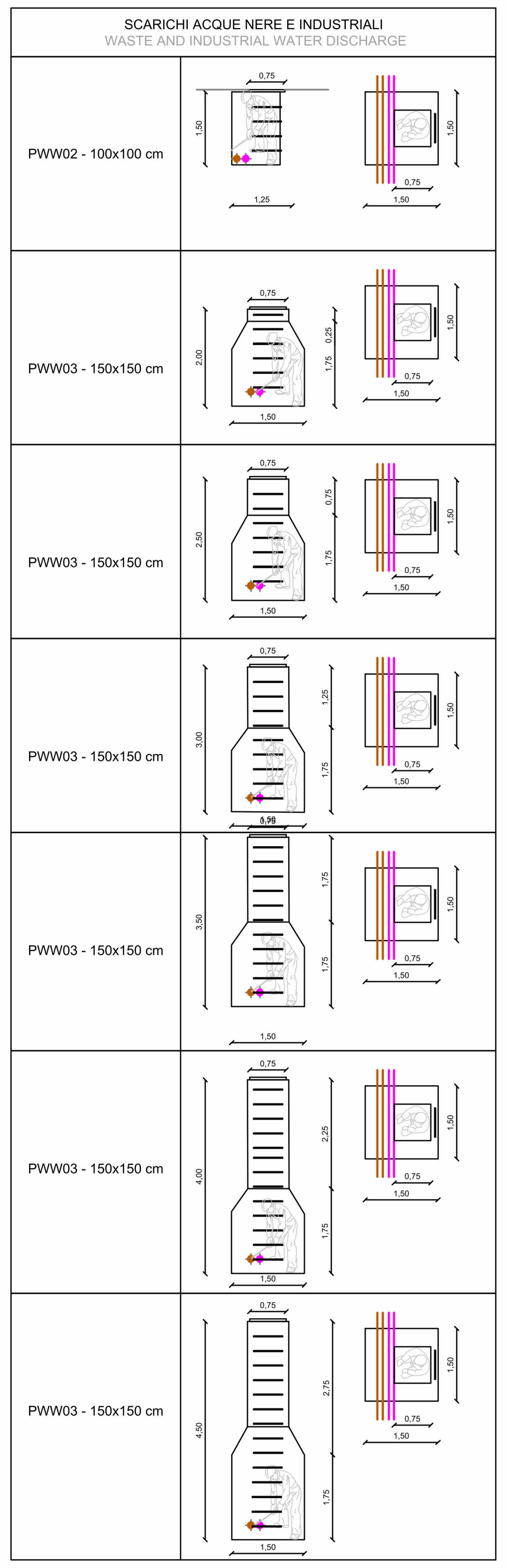
SCARICHI ACQUE NERE E INDUSTRIALI
WASTE AND INDUSTRIAL WATER DISCHARGE
PWW02 - 100x100 cm
PWW03 - 150x150 cm
PWW03 - 150x150 cm
PWW03 - 150x150 cm
PWW03 - 150x150 cm
PWW03 - 150x150 cm
PWW03 - 150x150 cm

EXCAVATION TYPICAL CROSS SECTION

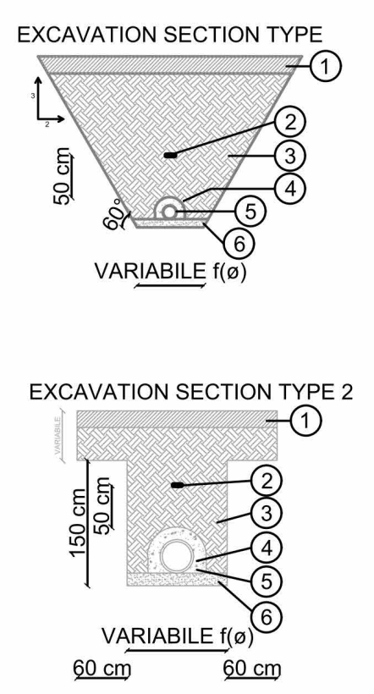
EXCAVATION SECTION TYPE
50 cm
60°
VARIABILE f(ø)
EXCAVATION SECTION TYPE 2
150 cm
50 cm
VARIABILE f(ø)
60 cm
60 cm
1
2
3
4
5
6

PIPE DIAMETER	THICKNESS OF THE CONCRETE OF COVER	THICKNESS OF BACKGROUND SAND	WIDTH DIGGING
PVC ø160	≥ 100 mm	100 mm	800 mm
PVC ø200	≥ 100 mm	100 mm	800 mm
PEAD ø250	≥ 100 mm	100 mm	800 mm
PEAD ø315	≥ 100 mm	100 mm	800 mm
PEAD ø400	≥ 150 mm	150 mm	1200 mm
PEAD ø500	≥ 150 mm	150 mm	1300 mm
PEAD ø630	≥ 200 mm	150 mm	1600 mm
PEAD ø800	≥ 250 mm	150 mm	1800 mm
PEAD ø1000	≥ 300 mm	150 mm	2000 mm

	DESCRIPTION
1	STREET PACKAGE
2	WARNING TAPE-SEWER
3	FILL IN DRY MATERIAL
4	SUPPORT IN CONCRETE (THICKNESS AS A FUNCTION OF ø PIPE)
5	SUPPORT IN CONCRETE (THICKNESS AS A FUNCTION OF ø PIPE)
5	SIFTED SAND IN BACKGROUND

CONCRETE WALL WATER TIGHT PENETRATION

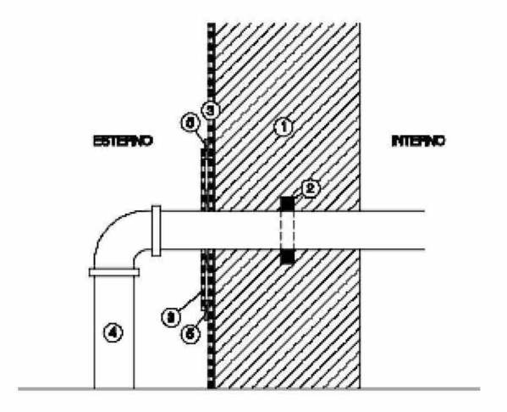
ESTERNO
INTERNO
1
2
3
4
5

	DESCRIPTION
1	REINFORCED CONCRETE WALL CONTAINMENT FOR TANK SYSTEM
2	WATER EXPAND JOINT
3	WATERPROOFING BARRIER
4	PEAD PIPE
5	ADDITIONAL WATERPROOFING BARRIER

Danilo
Ebalginelli
19.09.2024
11:49:38
GMT+02:00

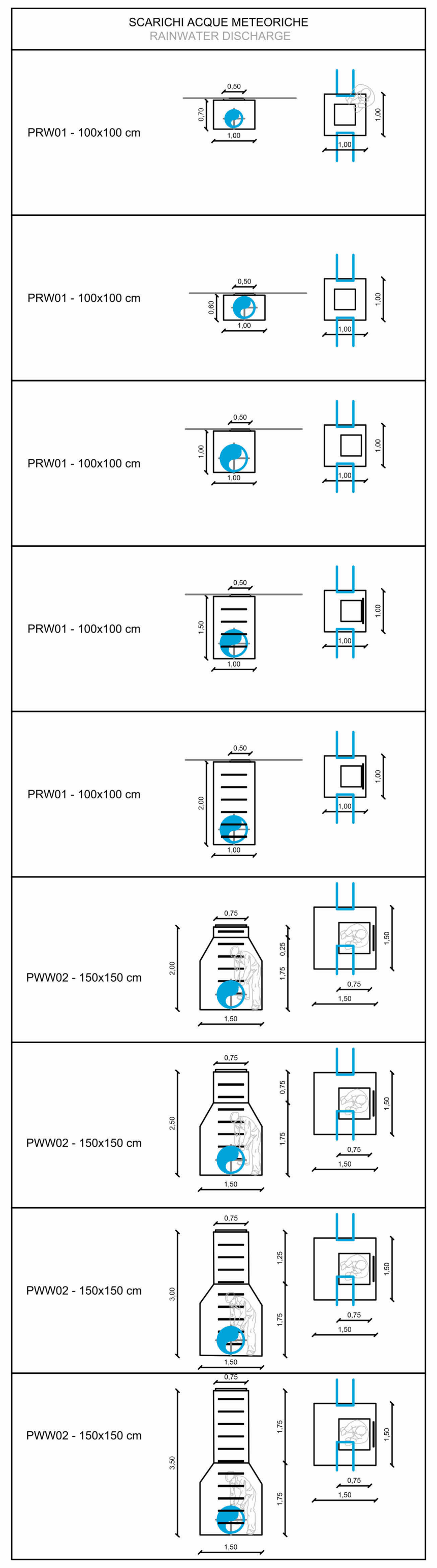
SCARICHI ACQUE METEORICHE
RAINWATER DISCHARGE
PRW01 - 100x100 cm
PRW01 - 100x100 cm
PRW01 - 100x100 cm
PRW01 - 100x100 cm
PRW01 - 100x100 cm
PWW02 - 150x150 cm
PWW02 - 150x150 cm
PWW02 - 150x150 cm
PWW02 - 150x150 cm

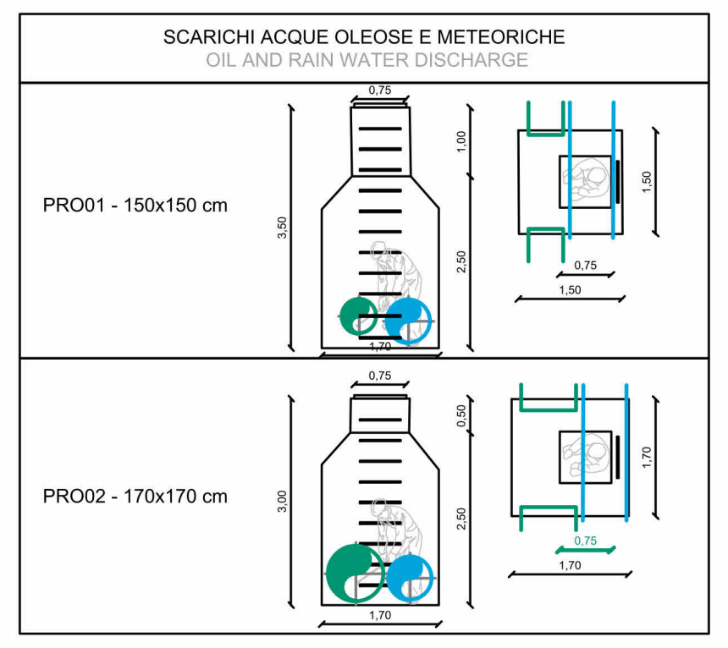
SCARICHI ACQUE OLEOSE E METEORICHE
OIL AND RAIN WATER DISCHARGE
PRO01 - 100x150 cm
PRO02 - 170x170 cm
3,00
0,50
2,50
1,70
0,75
1,70
1,70

DOWNSPOUT CONNECTION TYPICAL DETAIL

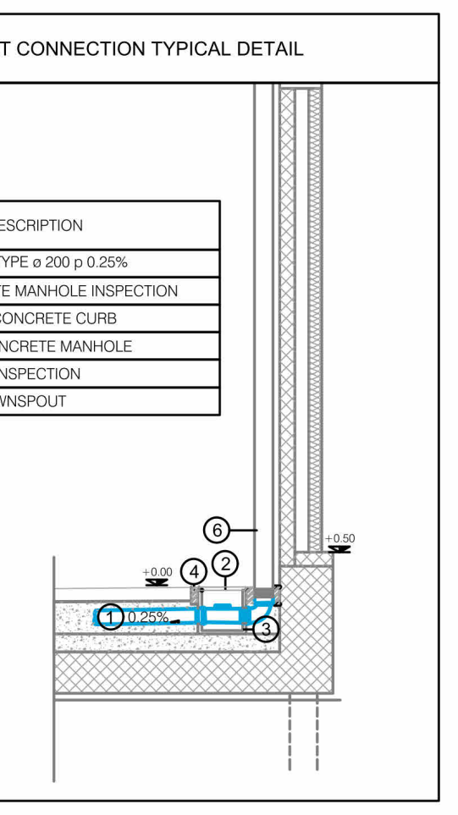
6
4
2
1
3
0.25%
+0.00
+0.50

	DESCRIPTION
1	PEAD PIPE TYPE ø 200 p 0.25%
2	PRECAST CONCRETE MANHOLE INSPECTION
3	PRECAST CONCRETE CURB
4	PRECAST CONCRETE MANHOLE
5	PIPE INSPECTION
6	DOWNSPOUT

CONCRETE WALL WATER TIGHT PENETRATION

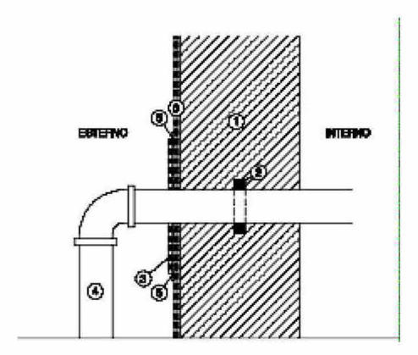
ESTERNO
INTERNO
1
2
3
4
5

	DESCRIPTION
1	REINFORCED CONCRETE WALL CONTAINMENT FOR TANK SYSTEM
2	WATER EXPAND JOINT
3	WATERPROOFING BARRIER
4	PEAD PIPE
5	ADDITIONAL WATERPROOFING BARRIER

TRENCH DRAIN TYPICAL DETAIL

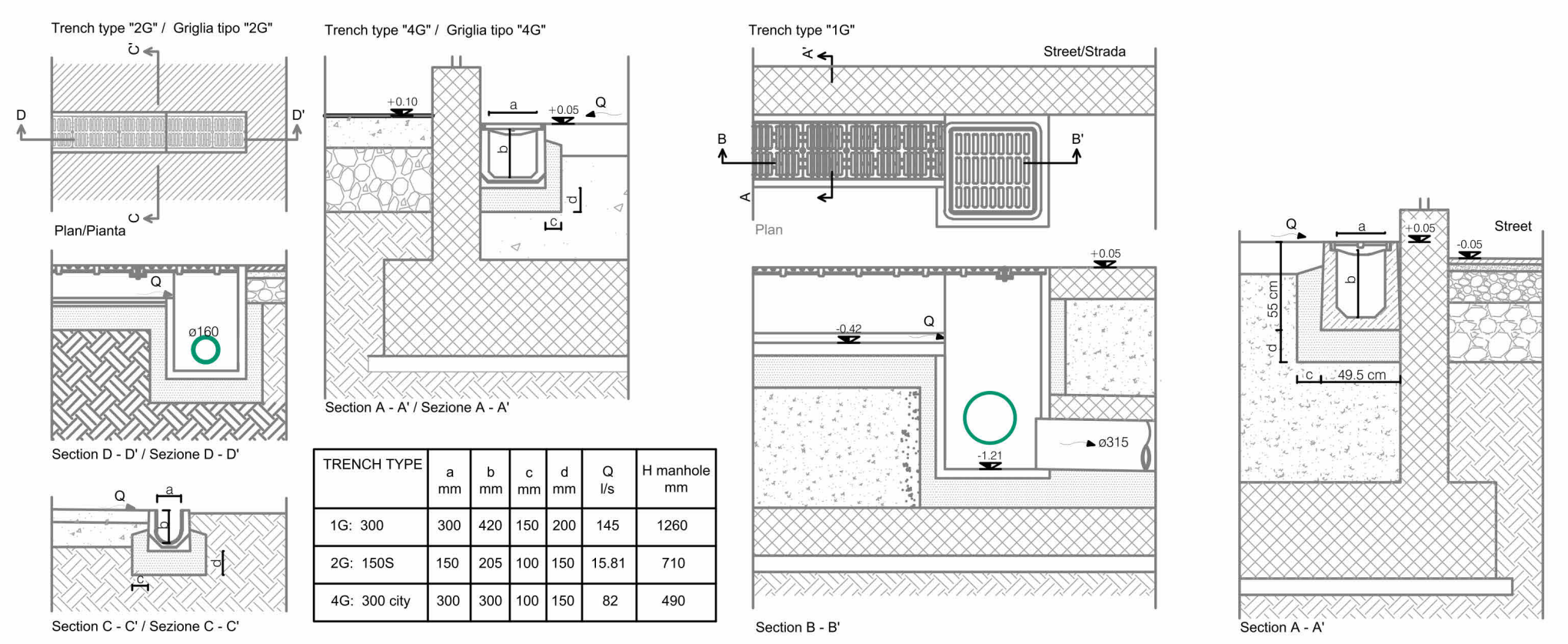
Trench type "2G" / Griglia tipo "2G"
Plan/Pianta
Section D - D' / Sezione D - D'
Section C - C' / Sezione C - C'
Trench type "4G" / Griglia tipo "4G"
Section A - A' / Sezione A - A'
Trench type "1G"
Street/Strada
Plan
Section B - B'
Street
Section A - A'

TRENCH TYPE	a mm	b mm	c mm	d mm	Q l/s	H manhole mm
1G: 300	300	420	150	200	145	1260
2G: 150S	150	205	100	150	15.81	710
4G: 300 city	300	300	100	150	82	490

EXCAVATION TYPICAL CROSS SECTION

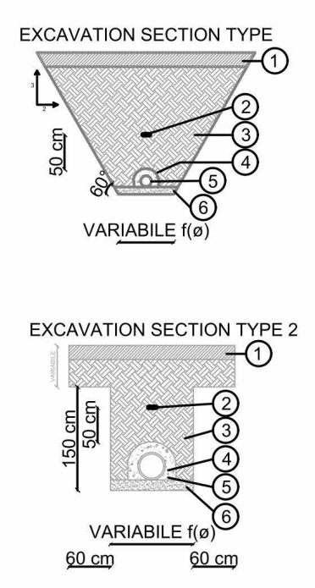
EXCAVATION SECTION TYPE
50 cm
60°
VARIABILE f(ø)
EXCAVATION SECTION TYPE 2
150 cm
50 cm
VARIABILE f(ø)
60 cm
60 cm
1
2
3
4
5
6

PIPE DIAMETER	THICKNESS OF THE CONCRETE OF COVER	THICKNESS OF BACKGROUND SAND	WIDTH DIGGING
PVC ø160	≥ 100 mm	100 mm	800 mm
PVC ø200	≥ 100 mm	100 mm	800 mm
PEAD ø250	≥ 100 mm	100 mm	800 mm
PEAD ø315	≥ 100 mm	100 mm	800 mm
PEAD ø400	≥ 150 mm	150 mm	1200 mm
PEAD ø500	≥ 150 mm	150 mm	1300 mm
PEAD ø630	≥ 200 mm	150 mm	1600 mm
PEAD ø800	≥ 250 mm	150 mm	1800 mm
PEAD ø1000	≥ 300 mm	150 mm	2000 mm

	DESCRIPTION
1	STREET PACKAGE
2	WARNING TAPE-SEWER
3	FILL IN DRY MATERIAL
4	SUPPORT IN CONCRETE (THICKNESS AS A FUNCTION OF ø PIPE)
5	SUPPORT IN CONCRETE (THICKNESS AS A FUNCTION OF ø PIPE)
5	SIFTED SAND IN BACKGROUND

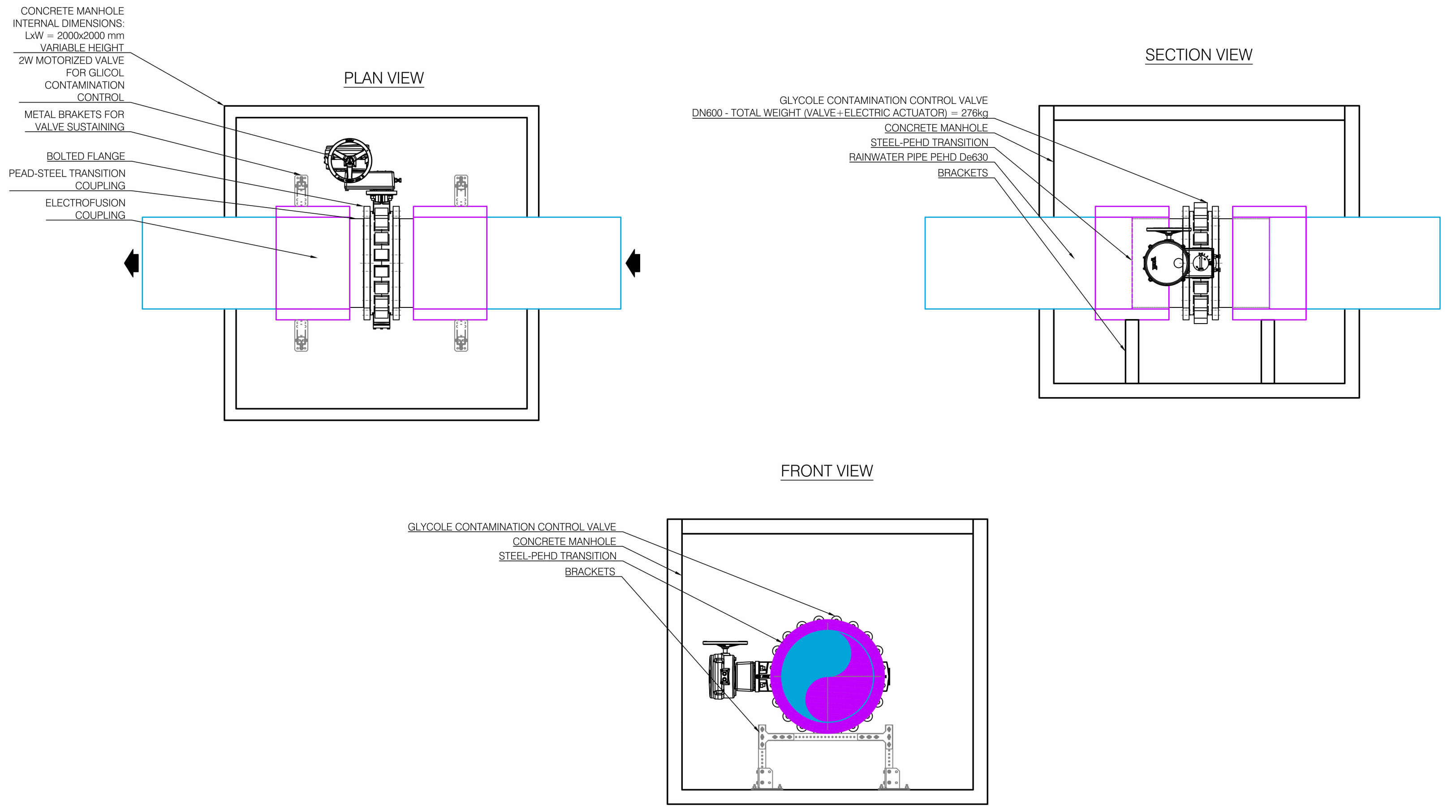
PLAN VIEW
CONCRETE MANHOLE
INTERNAL DIMENSIONS:
LxW = 2000x2000 mm
VARIABLE HEIGHT
2W MOTORIZED VALVE
FOR GLICOL
CONTAMINATION
CONTROL
METAL BRAKETS FOR
VALVE SUSTAINING
BOLTED FLANGE
PEAD-STEEL TRANSITION
COUPLING
ELECTROFUSION
COUPLING
SECTION VIEW
GLYCOLE CONTAMINATION CONTROL VALVE
DN600 - TOTAL WEIGHT (VALVE+ELECTRIC ACTUATOR) = 276kg
CONCRETE MANHOLE
STEEL-PEHD TRANSITION
RAINWATER PIPE PEHD De630
BRACKETS
FRONT VIEW
GLYCOLE CONTAMINATION CONTROL VALVE
CONCRETE MANHOLE
STEEL-PEHD TRANSITION
BRACKETS

Scarico acque nere e industriali, meteoriche e oleose

Industrial and Domestic Waste water,Rain and Oil water drainage systems

SD	Scarico Acque Nere *Soil Water*
ID	Scarico Acque Industriali *Industrial Water*
RD	Scarico Acque Meteoriche *Rain Water*
OD	Scarico Acque Oleose *Oil water*

GENERAL NOTES:
- The present drawing is valid for mechanical systems object of tender only.
- Every dimension and position of materials and equipment must be verified on site by the contractor, who must promptly give notice of possible interferences.
- Possible non surveyed systems shall be preserved; whereas needed, they shall be modified and their functioning reactivated by the contractor.
- Accurate positions of equipment, materials, piping, ducts, connections to existing systems shall be defined by the contractor and submitted to the works supervisor.
- Final sizing depending on actually installed equipment and materials manufacturer.
- All equipment shall be easily maintainable and accessible through access panels or similar solutions, including where not explicitly indicated.
- The contractor shall size and certify all supports in a workmanlike manner and in respect of every prescription regarding antiseismic design.
- Constructive detail drawings necessary to the correct execution of the works shall be drafted by the manufacturer.
- Installations of elements on site shall comply with every prescription and recommendation by the producers and by the highest trade standards in the relevant fields, including acoustics and fire prevention.
- Every work considered and described, evaluated based on available documentation, shall be reevaluated and analyzed during the construction phase, after system verification following adequate survey of the existing situation.
- The contractor shall accurately check the project and give notice of any inaccuracy, incompleteness o discrepancy with any code or law.
- In case of piping or duct material change, the same pressure drop of the design material shall be guaranteed.
- All construction and coordination drawings, along with all material sheets, shall be submitted to the works supervisor for approval.
- Every infrastructure needed to deliver functioning and testable systems shall be verified on site by the contractor.
-The bottom tube measurements refer to the project Zero Level

NOTE GENERALI
1. Il presente documento è valido solo per il progetto di "Disciplina".
2. Per la corretta interpretazione del disegno è necessaria la lettura congiunta di tutti gli elaborati di progetto e grafici.
3. Il dimensionamento e la redazione degli elaborati esecutivi e costruttivi finali sono a carico dell'Appaltatore, dovranno essere approvati dalla D.L.
4. Tutti i dettagli descrittivi sono contenuti nei documenti Capitolato Speciale, Relazione e Computo Metrico.
5. Qualsiasi riproduzione, uso o modifica del progetto e dei disegni è strettamente vietata a meno di autorizzazione da parte del progettista, che rimane l'autore e il proprietario morale del progetto.
6. Sarà onere dell'impresa una verifica di rispondenza con quanto contenuto nei documenti di progetto rispetto all'elaborato di L10.
7. Tutte le quote sia altimetriche che dimensionali devono essere verificate e accuratamente rilevate in sito a cura dell'appaltatore dei lavori prima dell'esecuzione dei lavori, informare immediatamente la D.L. in caso di difformità.
8. Sarà onere dell'impresa una verifica di rispondenza con quanto contenuto nei documenti di progetto rispetto al Progetto di Prevenzione Incendi. In tutti gli attraversamenti di solai o pareti che delimitano compartimenti antincendio, devono essere previste adeguate barriere tagliafiamma in modo da ripristinare la resistenza al fuoco.
9. Il progetto potrà essere oggetto di revisioni a seguito di ricezione commenti degli Enti Comunali alle pratiche amministrative.
10. Tutte le finiture e le colorazioni saranno da campionare e definire con la D.L.
11. Gli impianti meccanici ed elettrici a progetto potrebbero risultare complanari o coincidenti, non sono stati sviluppati eventuali abbassamenti di quota puntuali o spostamenti della distribuzione. In fase di progettazione costruttiva sarà necessario verificare il coordinamento interdisciplinare.
12. Alcuni Pozzetti gettati in opera sono in continuità con altre opere strutturali quali solette o fondazioni, in fase di cantiere sarà necessario dunque prevedere il coordinamento tra i vari elementi per la realizzazione di un unico getto.
13. Tutti gli staffaggi ed i tiranti rappresentati nel progetto sono a solo titolo esemplificativo. I disegni tipologico devono dunque essere utilizzati come esempio per la realizzazione dei disegni costruttivi degli staffaggi. Prima dell 'installazione in opera, l'Appaltatore dovrà sempre consegnare alla D.L., le relazioni di verifica di tenuta alle azioni sismiche.
14. La stratigrafia edile sopra i serbatoi di gasolio dei Generatori interrati dovrà essere realizzata prevedendo che gli stessi non possano essere danneggiati dall'eventuale passaggio di automezzi pesanti.
15. Il sistema fotovoltaico e di supporto dello stesso dovrà essere sviluppato dall 'appaltatore nel progetto esecutivo e costruttivo nel rispetto della relazione di calcolo fotovoltaico e dai limiti della normativa vigente.
16. Si ritiene esclusa dal presente appalto la fornitura delle disintermediate: Rack nelle Data hall e dell'infrastruttura dati ad essi connessa, i Gruppi Elettrogeni comprensivi di serbatoio interrato e di tutti i sistemi ausiliri (tubazioni di ricarica, sistema di monitoraggio delle perdite ecc); la fornitura dei Moduli prefabbricati; Chiller; Fan Wall.

GENERAL NOTES:
1. *This document is valid only for the "Subject"" project.*
2. *For the correct interpretation of the drawing, it is necessary to read all project and graphic drawings together.*
3. *The sizing and drafting of the final executive and construction drawings are the responsibility of the Contractor; they must be approved by the DP.*
4. *All descriptive details are contained in the Special Specifications, Report and Metric Computation documents.*
5. *Any reproduction, use or modification of the design and drawings is strictly prohibited unless authorized by the designer, who remains the author and moral owner of the project.*
6. *It will be the responsibility of the contractor to verify that what is contained in the design documents corresponds to the L10 drawing.*
7. *All elevations, both elevational and dimensional, shall be verified and accurately surveyed on site by the work contractor prior to execution of the work, informing the DP immediately in case of discrepancies.*
8. *It will be the contractor's responsibility to verify compliance with what is contained in the project documents against the Fire Prevention Project. In all floor or wall penetrations bordering fire compartments, adequate fire barriers shall be provided so as to restore fire resistance.*
9. *The project may be subject to revisions following receipt of comments from the Municipal Authorities to the administrative files.*
10. *All finishes and color will be to be sampled and defined with the DP.*
11. *Mechanical and electrical systems as designed may be coplanar or coincident; any punctual lowering of elevations or shifts in distribution have not been developed. Interdisciplinary coordination will need to be developed during construction design.*
12. *Some poured manholes are in continuity with other structural works such as slabs or foundations, therefore, coordination between the various elements will need to be provided at the construction site to make a single casting.*
13. *All brackets and tie-rods represented in the design are for illustrative purposes only. The type drawings should therefore be used as examples for the construction drawings of the stirrups. Prior to installation in place, the Contractor shall always deliver to the DP, the reports of verification of resistance to seismic actions.*
14. *The construction stratigraphy over the diesel tanks of the underground Generators shall be carried out providing that the same cannot be damaged by the possible passage of heavy vehicles.*
15. *The photovoltaic system and support of the same shall be developed by the contractor in the executive and construction design in compliance with the photovoltaic calculation report and from the limits of the regulations.*
16. *It is considered excluded from this contract the supply of the disintermediate: Racks in the Data halls and the data infrastructure connected to them, the Diesel Generators including underground tank and all auxiliary systems (charging pipes, leakage monitoring system, etc.); the Prefabricated Modules; Chillers; Fan Walls.*

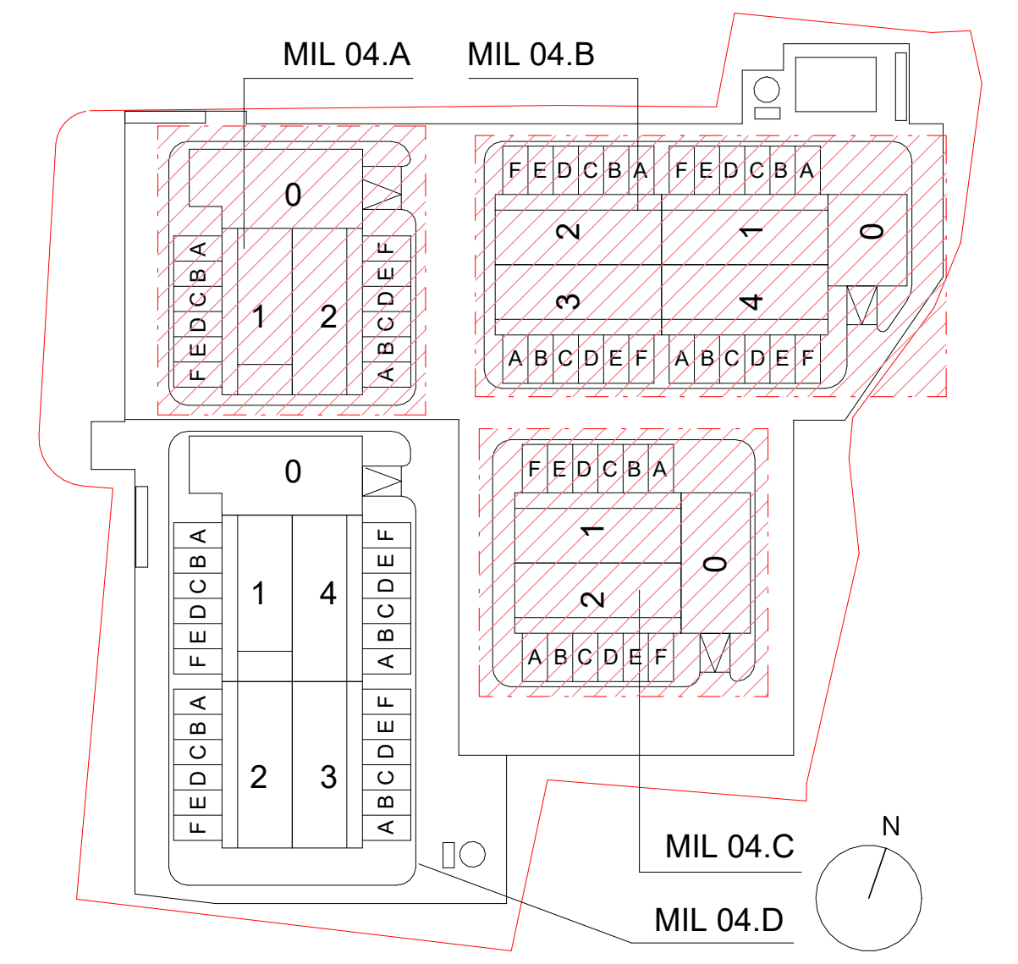
MIL 04.A
MIL 04.B
MIL 04.C
MIL 04.D
N
F E D C B A
A B C D E F
0
1
2
3
4

REV	DATA / DATE:	DESCRIZIONE / DESCRIPTION:

PROGETTISTA / DESIGNER:
L22
L22 è una divisione di:
Lombardini22 S.p.A.
Via Lombardini 22 20143 Milano, Italia
T +39 02 36 59 62 00 F +39 02 83 20 13 97
info@l22.it www.l22.it

Black & White Engineering:
69 Wilson Street London, EC2A 2BB
United Kingdom
www.bw-engineering.com

STRUTTURE:
Ing. Arturo Donadio
S.P.S. S.r.l. www.spssrl-mi.it
Via M. Gioia, 64 - 20125 Milano, Italia
segreteria@spssrl-mi.it T. 02/6694887

COMMITTENTE / CLIENT:
STACK INFRASTRUCTURE
INFRASTRUCTURE ITALIA LAND 4 S.r.l.
Via del Bosco Rinnovato, 6 Palazzo U4 20090 Assago (MI)

PROGETTO / PROJECT:
MIL 04
Alzaia Naviglio Pavese snc,
Vellezzo Bellini (PV)

PROGETTISTA / DESIGNER:
Ing. Roberto Cereda - Iscritto all'Ordine degli Ing. di Brescia n°N.2609

OGGETTO / OBJECT:
RIBA4 - MIL 04.C

TITOLO / DESCRIPTION:
Mechanical Systems
Drainage System Details

DISEGNATO DA: DRAWN BY:	CONTROLLATO DA: CHECKED BY:
GTI	MIC
DATA/ DATE: 27/10/2023	SCALA / SCALE: 1:200
NOME FILE / FILE NAME: 3604_EM-5401G	
COMMESSA / JOB: 3604	FORMATO / SHEET: A0
TAVOLA / DRAWING: EM-5401	
DATA REV.:	REV.:

© Lombardini22 S.p.A. ES DT (rev.-) (L.663/41 Art.2575)